禁用RoHS / REACH/SS00259 之有害物質

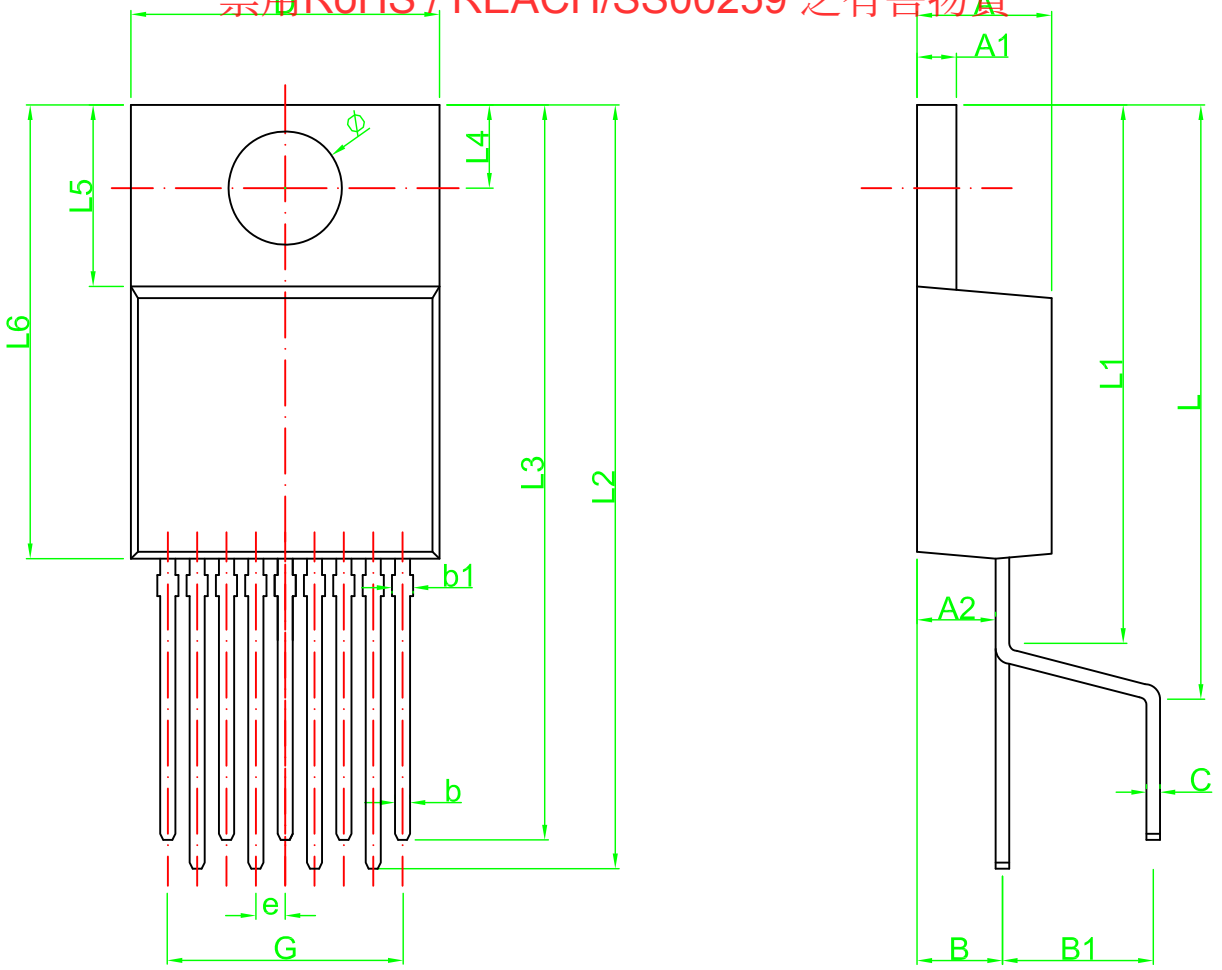

Symbol	Dimensions in Millimeters		Dimensions in Inches	
	Min	Max	Min	Max
A	4.45	4.69	0.175	0.185
A1	1.22	1.32	0.048	0.052
A2	2.40	2.80	0.094	0.110
b	0.46	0.56	0.018	0.022
b1	0.56	0.66	0.022	0.026
B	2.48	3.11	0.098	0.122
B1	4.83	5.33	0.190	0.210
C	0.35	0.55	0.014	0.022
D	10.05	10.40	0.396	0.409
e	0.85	1.09	0.033	0.043
G	7.52	7.92	0.296	0.312
L	20.26	20.76	0.798	0.817
L1	16.59	17.09	0.653	0.673
L2	25.10	25.60	0.988	1.008
L3	24.07	24.57	0.948	0.967
L4	2.62	2.86	0.103	0.113
L5	6.00	6.60	0.236	0.260
L6	14.73	16.01	0.580	0.630
⌀	3.65	3.85	0.144	0.152

UTC 友順科技股份有限公司
UNISONIC TECHNOLOGIES CO.,LTD

正式發行圖面

SCALE 4:1 | mm 0 30 | THIRD ANGLE PROJECTION

SHEET 1 of 1

REV: A0
PART NO:TO-220Z9
DWG NO:DIM-TO-220Z9-012-A0

TITLE **TO-220Z9 Package Dimensions**

ENG. Angus Chang 2016/08/22
APPR. Jimmy Chang 2016/08/22

發行 FOR ISSUE Aug 24 2016 文件管理中心 UTC Doc.Control Center